Ultra PX for UHPRO

The key to low-cost ZLD/MLD industrial wastewater treatment

To improve water sustainability, governments have mandated Zero or Minimal Liquid Discharge (ZLD or MLD) requirements for industrial wastewater treatment, aimed at reducing wastewater discharge and reusing water from industrial applications. The PX® Pressure Exchanger® (PX) drives ZLD/MLD operational efficiency by using cutting-edge energy recovery technology to reduce energy waste in Ultra High Pressure Reverse Osmosis (UHPRO) for industrial wastewater treatment.

Our Ultra PX energy recovery device, when paired with our UHP Circulation Pump, delivers an end-to-end energy recovery solution that maximizes efficiency and cost savings. The UHP Circulation Pump is designed to complement the Ultra PX for ZLD and MLD applications with flows ranging from 4.5 to 13.6 m^3/hr in ultra high pressure environments.

**Projected benefits for the Ultra PX are based on Energy Recovery's PX Pressure Exchanger, which is installed in SWRO and BWRO plants around the world.*

Ultra PX BENEFITS*

- Designed to recover up to 60% of otherwise wasted energy
- Industry leading reliability
- Industry leading efficiency in all flow conditions
- Low OPEX and fast payback
- Compact, modular and scalable

FEATURES

- Operates at pressures up to 120 bar
- One moving component
- Corrosion resistant alumina core
- No scheduled maintenance

©2021 Energy Recovery

UHPRO VERSUS THERMAL PROCESSES FOR BRINE CONCENTRATION

In industrial wastewater treatment, 50 percent of overall treatment costs are often driven by the last 10 percent of the water treatment process due to the use of high-cost treatment technologies. UHPRO moves high capital and operating cost technologies, such as mechanical vapor compression (MVC), forward osmosis (FO), and electrodialysis (ED), further downstream. Energy Recovery's Ultra PX further reduces the energy waste of the UHPRO process by returning that pressure energy to the system, ultimately reducing overall energy costs.

Ultra PX

SPECIFICATIONS

Flow Range: 4.5 to 9.1 m3/h (20–40 gpm)

Operating Pressure: 120 bar (1,740 psi)

Primary Material: Ceramic alumina

Wetted Metals: Super duplex or equivalent for superior corrosion resistance

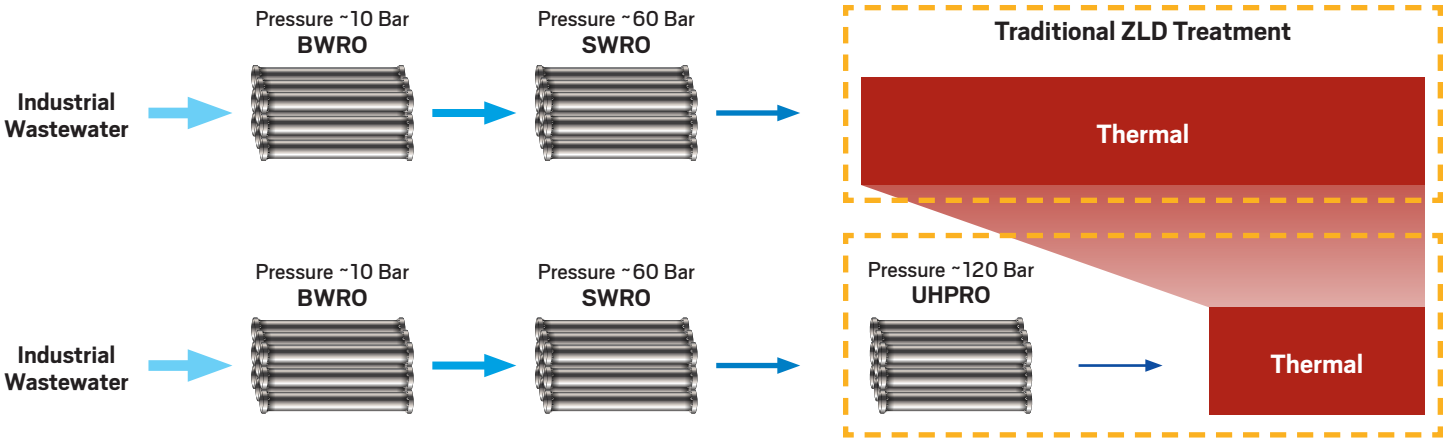

ZLD Treatment with UHPRO

ENERGY RECOVERY — TRUSTED PARTNER FOR DESALINATION

Energy Recovery is the leader in energy recovery technology, with over 20 years of industry experience and over 20,000 PX devices installed in Seawater Reverse Osmosis (SWRO) and Brackish Water Reverse Osmosis (BWRO) plants across the world. Our PX has revolutionized desalination by reducing SWRO energy costs by up to 60%, contributing to the overall affordability of the treatment process and making SWRO the industry standard compared to thermal desalination.

The Ultra PX delivers the same best-in-class energy recovery efficiency and performance for UHPRO industrial wastewater treatment.

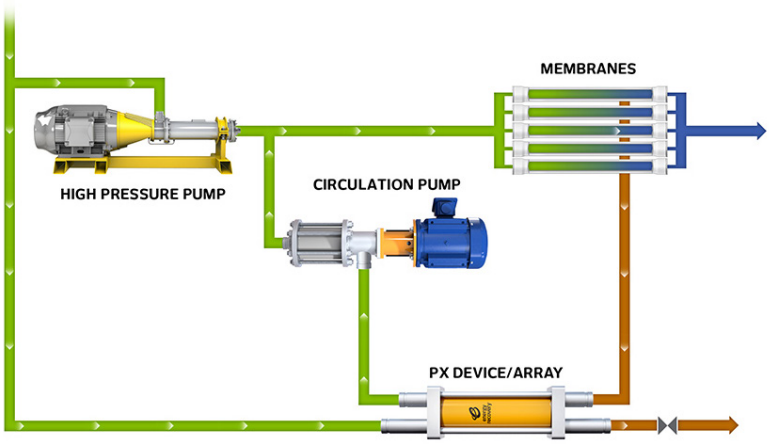

FOR MORE INFORMATION ON OUR FULL SUITE OF ENERGY RECOVERY SOLUTIONS, PLEASE VISIT ENERGYRECOVERY.COM.

AT Turbocharger™

PX® Pressure Exchanger®

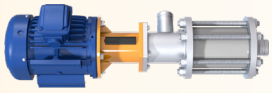

UHP Pump

©2021 Energy Recovery